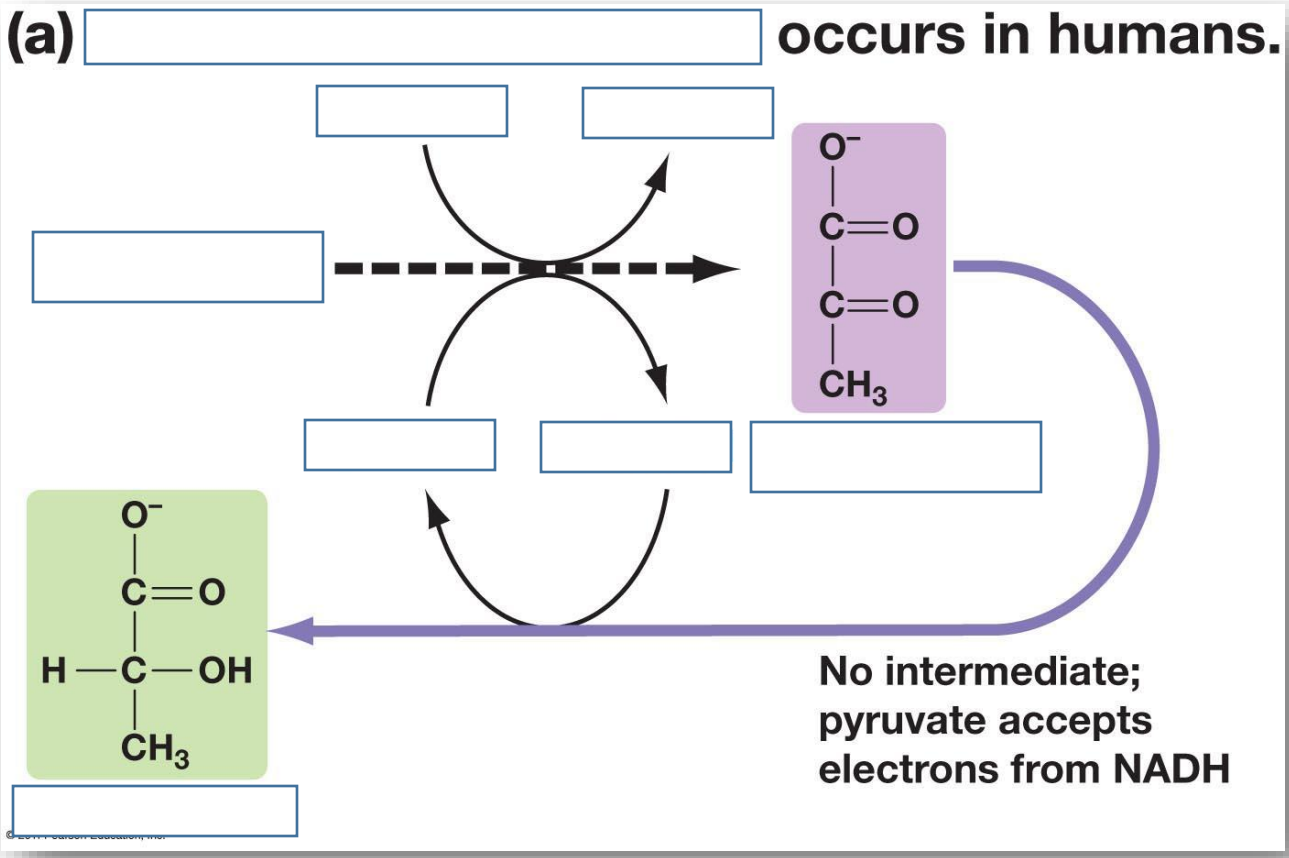
(a) occurs in humans.
O⁻
C=O
C=O
CH3
O⁻
C=O
H—C—OH
CH3
No intermediate;
pyruvate accepts
electrons from NADH

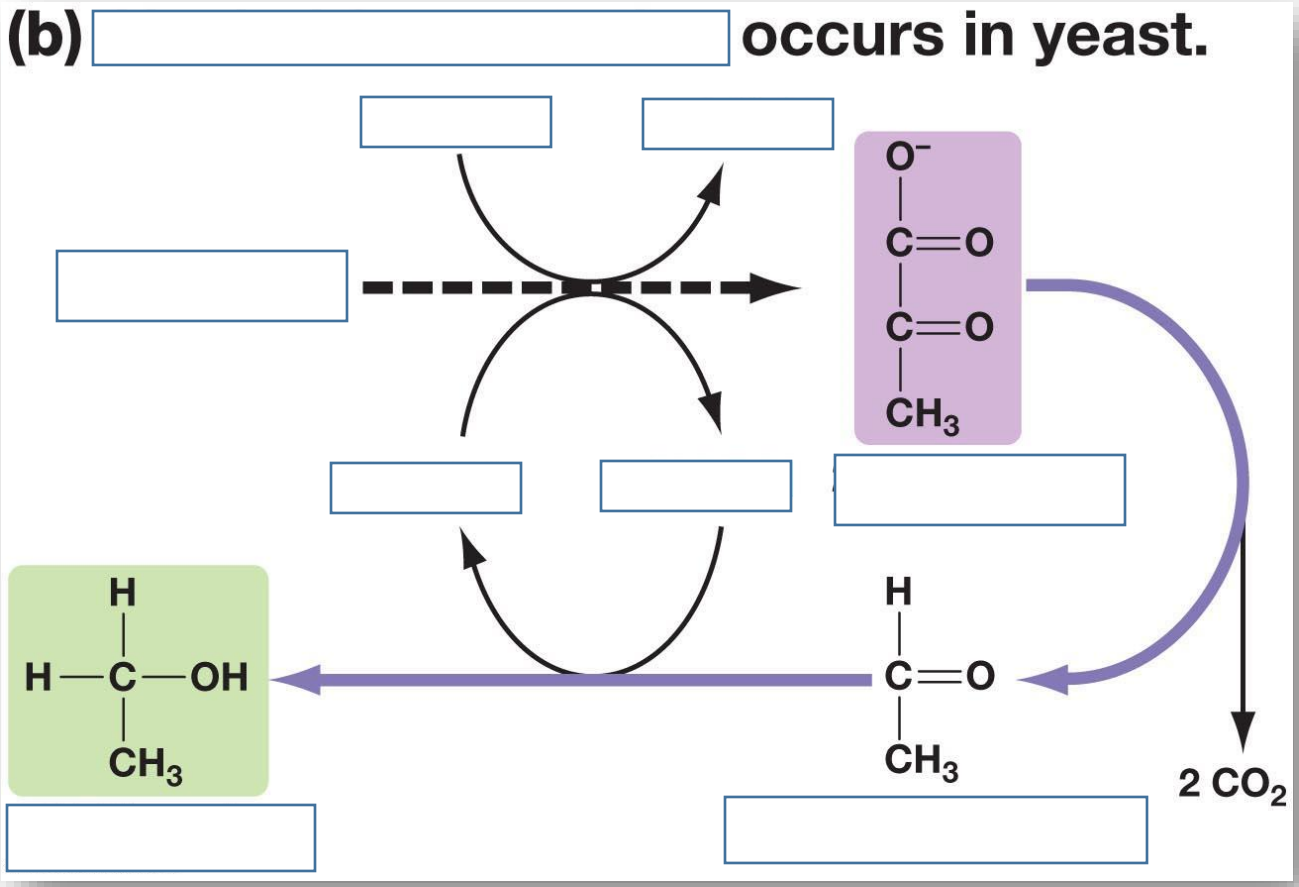
(b) occurs in yeast.
O⁻
C=O
C=O
CH3
H
H—C—OH
CH3
H
C=O
CH3
2 CO2